T-KIT Manual No. **74329**
[redacted]

Kit Assembly and Instruction Manual for **T-KIT** Module Board Kit Model No. 1551

Speech Processor

Table of Contents

Introduction 4
Circuit Description 4
Schematic Diagram 5
Kit Parts List 6
Circuit Board X-Ray View 7
Installing Parts on the Board 7
Circuit Board Assembly Steps 8-9
Installation, Suggested Hookup 10
First Tests, Adjustments 11
Troubleshooting Guide 12
Conclusion 12
T-KIT Limited Warranty . . . . . *inside back cover*

IMPORTANT: Please read Warranty Terms and entire manual text BEFORE starting kit assembly.

. . . A quality electronics kit project from

T-KIT
a Division of TEN-TEC, Inc.
1185 Dolly Parton Parkway
Sevierville, Tennessee 37862
(615) 453-7172
Fax (615) 428-4483

Circuit board and manual Copyright © 1994. All Rights Reserved.
Manual text and design by Dan F. Onley, K4ZRA.

Introduction

This T-KIT No. 1551 is an accessory for older transceivers and also a module for homebuilt SSB/DSB equipment. This very economical kit provides the same audio speech processor circuit used in TEN-TEC HF transceivers such as the Omni VI and Paragon II. Its purpose is to let you add speech processing easily to any SSB transceiver without this feature.

Speech processing improves the intelligibility of SSB voice transmissions and has been a standard built-in feature of most amateur transceivers manufactured since the early 1980's. However, there are plenty of otherwise-excellent used transceivers on the air and available from dealers or at hamfests which can benefit from the addition of speech processing.

The audio speech-processing circuitry is inserted between the microphone itself and the existing microphone input of the transmitter or transceiver.

Without audio processing, SSB RF waveforms have very high peaks, but suffer in their AVERAGE RF power. In brief, speech processing boosts the average "talk power" with a noticeable improvement in signal intelligibility. A properly designed (and adjusted) audio processor does this without causing splatter. For additional background, See Chapter 7, "Audio and Video" in any recent *ARRL Handbook*.

Circuit Description

U2A is simply an audio amplifier. Its output at the the processor adjustment control (R19) is unprocessed (and could be routed through a switch directly to the microphone input of the transceiver if a given mike would benefit from preamplification). The processor input (wiper of R19) is amplified to a nominal 1.2 volts peak by U1A and again by U1B to approximately 1.8 volts peak. One output of U1B drives rectifier diode D1 and Q1, the compressor transistor. Q1 clamps part of the original input to ground, effectively maintaining a constant audio level at the output of U1A. Half the output of U1A appears across clipper diodes D2 and D3, but no clipping occurs at the normal level of 0.6 volts. The clipper diodes limit fast audio transients (for which the Q1 compressor circuit is less effective) to 0.65-0.7 volts. The compressed and limited speech processor level is set by trimmer pot R22. U2B is a buffer stage for speech processor output. Trimmer R22 is adjusted so that the peak level of processed audio is the same as that of unprocessed audio.

T-KIT Model No. 1551 Speech Processor:

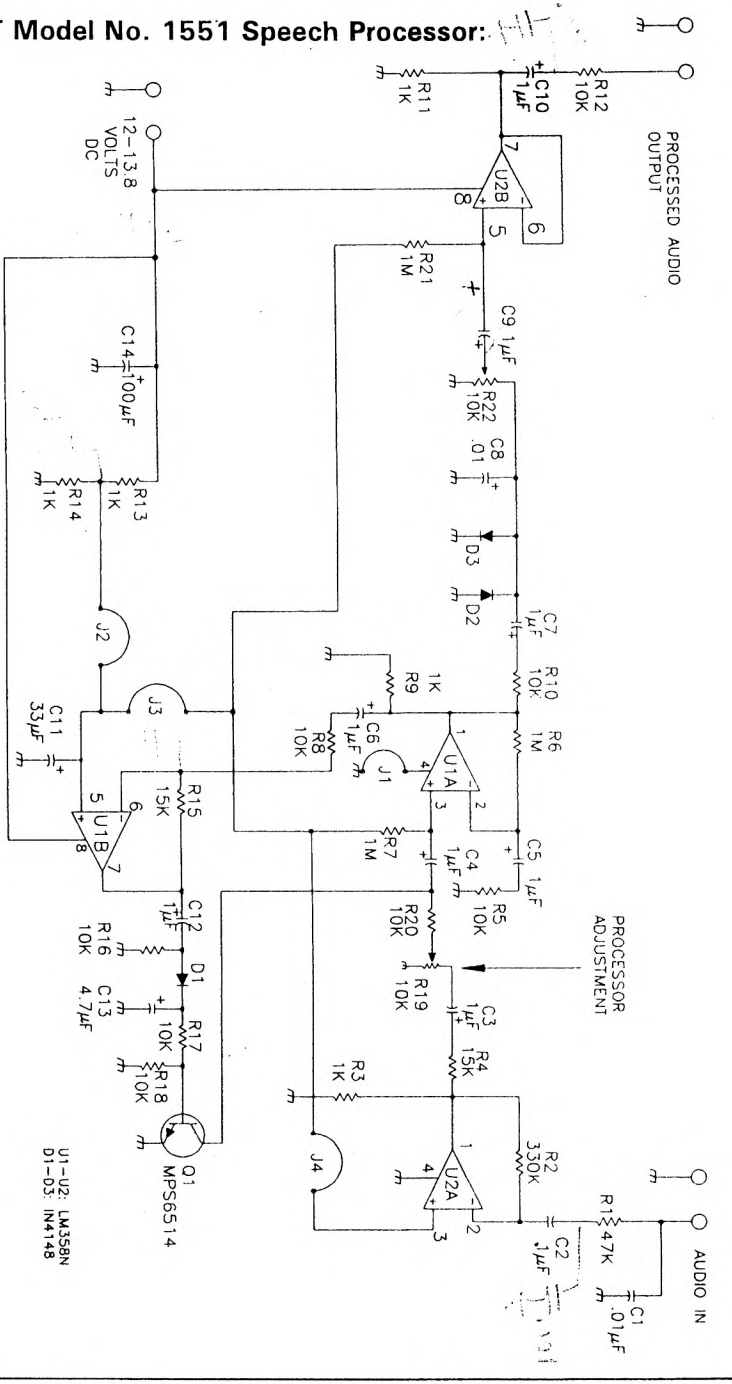

T-KIT 1551 Speech Processor
KIT PARTS LIST

Please check and organize all parts before starting construction. See T-KIT Warranty if you suspect any parts are missing.

Quantity	Description and Value	Schematic	Part No.
	Fixed Resistors		
	The 3 color bands denote resistance value. The 4th band (gold) denotes 5% tolerance.		
5 ❑	1K (brown-black-red)	R3,9,11,13,14	30333
8 ❑	10K (brown-black-orange)	R5,8,10,12 16,17,18,20	30296
2 ❑	15K (brown-green-orange	R4,R15	30297
1 ❑	47K (yellow-violet-orange)	R1	30300
1 ❑	330K (orange-orange-yellow)	R2	30302
3 ❑	1 megohm (brown-black-green)	R6,R7,R21	30360
	Fixed Capacitors		
2 ❑	.01 uF (marked 103)	C1,C8	23260
1 ❑	.1 μF (marked 104)	C2	23261
8 ❑	1 uF electrolytic	C3-7,9,10,12	23264
1 ❑	4.7 uF electrolytic	C13	23310
1 ❑	33 uF electrolytic	C11	23308
1 ❑	100 uF electrolytic	C14	23189
	Semiconductor Devices: Transistor, Diodes, Integrated Circuits:		
1 ❑	NPN transistor type MPS6514	Q1	25054
3 ❑	1N4148 silicon rectifier diode	D1,D2,D3	28001
2 ❑	LM358 dual op-amp 8 pin DIP IC	U1,U2	25117
	Other Components, Hardware:		
1 ❑	Circuit Board for Model 1551		93103-2A
1 ❑	10K potentiometer	R19	30267
1 ❑	10K miniature trimmer	R22	30263
1 ❑	Model 1551 Kit Instruction Manual		74329

REQUIRED, NOT SUPPLIED:

- ❑ Battery or regulated, well-filtered 12-15 Volts DC
- ❑ metal enclosure (or other RF shielding) for speech processor circuit board
- ❑ chassis microphone connector
- ❑ microphone connector to transmitter/transceiver
- ❑ shielded audio cable

MINIMUM TOOLS AND TEST EQUIPMENT:

- ❑ 15 to 35 watt soldering iron
- ❑ diagonal cutters or wire "nippers"
- ❑ needle-nose pliers
- ❑ adjustable wire stripping tool
- ❑ small screwdriver (to adjust R22)
- ❑ VTVM or DVM

T-KIT Model 1551 Speech Processor
X-RAY View of Circuit Board

NOTE: Your T-KIT circuit board is quality glass epoxy, etched, cleaned and screen-printed in the TEN-TEC plant to the high standards required by our transceiver assembly lines and modernized wave-soldering system.

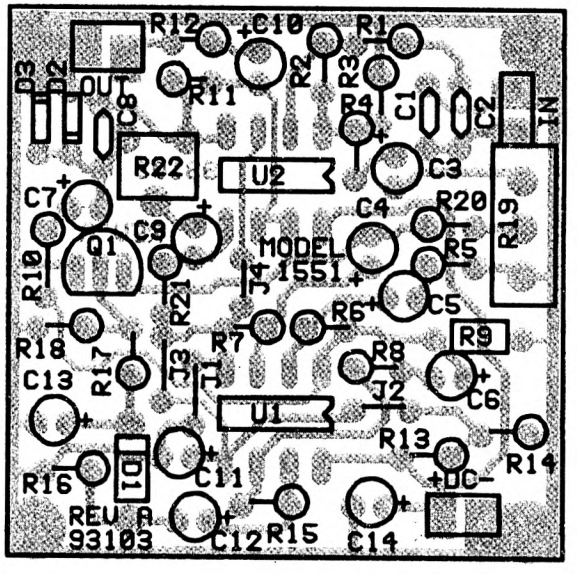

Installing Parts on the Circuit Board:

When we say **"INSTALL"** a part, we mean:

- ❑ Choose correct part value
- ❑ Insert in correct PC Board location
- ❑ Insert *correctly,* if there is a right way and wrong way such as for diodes, IC's, electrolytic capacitors, transistors etc.
- ❑ Solder all wires or pins
- ❑ Trim or "nip" excess wire lengths

USE ROSIN-CORE SOLDER ONLY,
of a type intended for electronic PC-board assembly.
(Available at electronics distributors or Radio Shack stores.)
DO NOT use hardware store solder, paste or flux.
Solder contains LEAD: wash hands before eating!

Circuit Board Assembly

While the parts may be soldered in any order convenient to you, the following steps provide many helpful details.

☐ ☐ 1. Install U1, LM358 dual op-amp, being sure to orient the notched or banded end of the IC with the notch outlined on the board. Solder all 8 pins, being careful not to form solder bridges across the pads.

☐ ☐ 2. Referring to Step 1, install U2, the other LM358 IC.

☐ ☐ 3. In this design, ALL resistors except R9 are installed vertically to save space. Simply follow the outlines on the board, standing the body of the resistor against the board in the circle area, looping the other wire through the hole at the end of the short line. Solder and trim both leads.

Install all resistors in any order convenient to you per No. 3:
☐ ☐ 4. R3, 1K (brown-black-red).
☐ ☐ 5. R9, also 1K. (normal style of installation)
☐ ☐ 6. R11, also 1K.
☐ ☐ 7. R13, also 1K.
☐ ☐ 8. R14, also 1K.
☐ ☐ 9. R5, 10K (brown-black-orange).
☐ ☐ 10. R8, also 10K.
☐ ☐ 11. R10, also 10K.
☐ ☐ 12. R12, also 10K.
☐ ☐ 13. R16, also 10K.
☐ ☐ 14. R17, also 10K.
☐ ☐ 15. R18, also 10K.
☐ ☐ 16. R20, also 10K.
☐ ☐ 17. R4, 15K (brown-green-orange).
☐ ☐ 18. R15, also 15K.
☐ ☐ 19. R1, 47K (yellow-violet-orange)
☐ ☐ 20. R2, 330K (orange-orange-yellow)
☐ ☐ 21. R6, 1 megohm (brown-black-green)
☐ ☐ 22. R7, also 1 megohm.
☐ ☐ 23. R21, also 1 megohm.

☐ ☐ 24. Install diode D1, type 1N4148, noting that its banded cathode end must match the schematic symbol on the board.

☐ ☐ 25. Install diode D2 per Step 24.
☐ ☐ 26. Install diode D3 per Step 24.

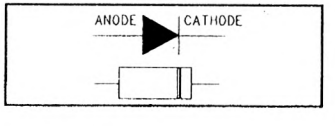

☐ ☐ 27. Install NPN transistor Q1, being sure to orient the flat side per the board outline.

☐ ☐ 28. Install C1, .01 uF (marked 103).
☐ ☐ 29. Install C8, also .01 uF.
☐ ☐ 30. Install C2, .1 uF (marked 104).

The circuit board layout requires installation of four jumper wires (J1-J4), which are made from scrap resistor or capacitor leads trimmed after soldering. Install the jumpers:

☐ ☐ 31. Jumper wire J1.
☐ ☐ 32. Jumper wire J2.
☐ ☐ 33. Jumper wire J3.
☐ ☐ 34. Jumper wire J4.

☐ ☐ 35. Install R22, the 10K trimmer potentiometer.

☐ ☐ 36. **Please read:** The circuit uses 10 polarized electrolytic capacitors. Each MUST be installed with correct polarity per the (+) signs screened on the board. The positive wire of the capacitors themselves is the longer one, and the negative side is identified clearly by the dark stripe on the capacitor body.

☐ ☐ 37. Install C3, 1 uF electrolytic per Step 36.

Referring to Step 36 as needed, install the remaining electrolytic capacitors, oriented for correct polarity:

☐ ☐ 38. C4, 1 uF
☐ ☐ 39. C5, 1 uF
☐ ☐ 40. C6, 1 uF
☐ ☐ 41. C7, 1 uF
☐ ☐ 42. C9, 1 uF
☐ ☐ 43. C10, 1 uF
☐ ☐ 44. C12, 1 uF
☐ ☐ 45. C13, 4.7 uF
☐ ☐ 46. C11, 33 uF
☐ ☐ 47. C14, 100 uF

☐ ☐ 48. Unless you plan to locate the R22 10K potentiometer Processor Gain control at a point away from the board, install R22 on the board now.

☐ ☐ 49. Double-check all previous steps before proceeding.

Installation

The DC voltage supply must be free of AC hum. Shielded cable MUST be used for audio connections. Unless your transceiver has a provision for monitoring transmit audio (using headphones) while producing little or no RF output, it will be necessary to make a fairly complete installation before testing. This is because the unshielded circut board is quite susceptible to stray RF, which is the cause of most speech processor problems.

Whether mounted inside a transceiver or in an external unit, the speech processor installation should have a provision for switching it in and out of the microphone line. A DPDT switch can be used for both DC on/off and processor in/out functions. For proper RF shielding, a metal enclosure and shielded cables must be used. This matter of RF shielding cannot be over-stressed, because stray RF getting into this sensitive audio circuit is the primary cause of speech processor problems. It would be good practice to use .01 μF bypass capacitors on any accessory lines (PTT, etc.) passing through the processor enclosure between the microphone and transceiver.

Use the following diagram as a guide for designing your actual installation:

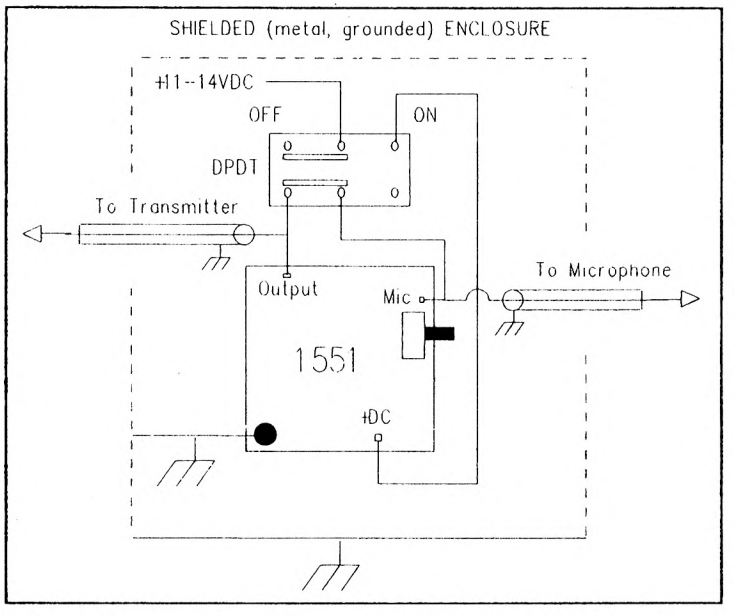

First Tests, Adjustments

Unless you have or know someone who has real transmit audio expertise, it may be difficult to get useful information about the effectiveness and proper adjustment of your speech processor through casual on-the-air queries. The best way to become familiar with the effect of speech processing on your signal is to set up a second receiver with headphones, use a dummy load and lowest RF power level, and . . . talk to yourself while switching the processor in and out and adjusting the control! If you are a newcomer or have only a casual interest in SSB operation, please DO get some tips from an experienced SSB operator about the do's and don'ts of speech processing.

Follow the transceiver manufacturer's instructions for adjustment of the microphone gain control for proper operation. Use of the processor circuit must not be permitted to exceed peak meter readings or LED indications specified for the equipment.

Trimmer R22 is adjusted so that the basic gain or talk power is at the same level with the processor in the microphone line as when it is not. More precisely, the peak levels of processed and unprocessed audio reaching the transmitter mike input should be the same.

PROCESSOR ADJUSTMENT NOTES:

ers and
very
or circuit
nd
ing easily

ce
f most
)'s.

amfests
g.

en the
he

' high
speech
ceable
(and
atter.
'ideo" in

rocessor
outed

cation).
inal 1.2
.8 volts
Q1, the
out to
the
clipper
level of
for
5-0.7
el is set
rocessor
f
o.

T-KIT Model No. 1551 Speech Processor:

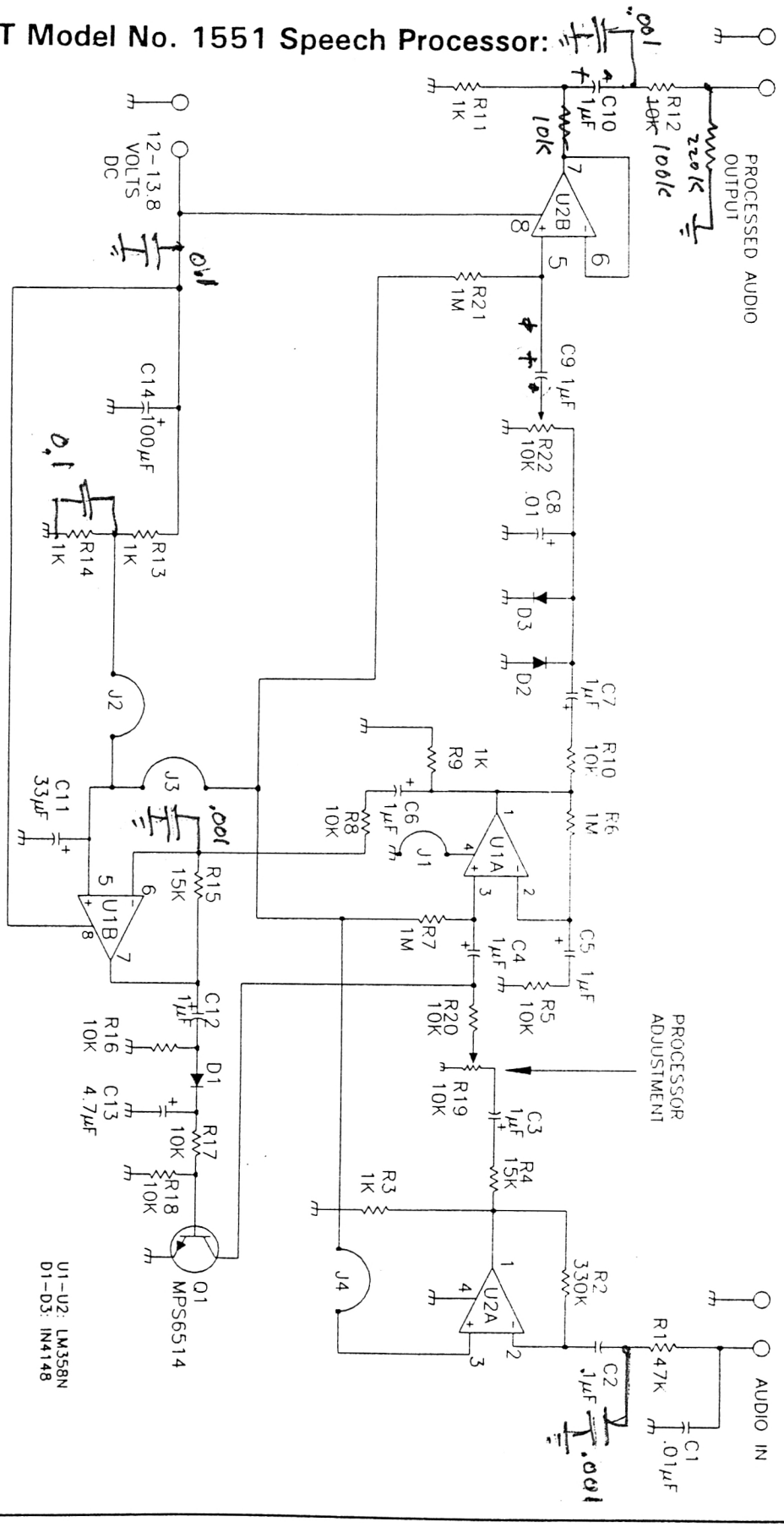

2/26/95